boroughofpoole.com

This guidance is supplementary to policy T11 of the Poole Local Plan First Alteration Adopted March 2004. It provides advice on appropriate levels of car, cycle and other types of parking in new development.

PARKING GUIDELINES

Supplementary Planning Guidance

Adopted 19 February 2004

Contents

		Page
1	Introduction	1
2	Objectives of this Guidance	1
3	Policy Context	2
4	Parking Guidelines for the Borough of Poole	5
4.1	Maxima for car parking	5
4,6	Guidelines for non-car modes	8
4.9	Summary table	9
4.18	Implementation of the Guidance	11
5	Car Parking and Access on Primary and Distributor Routes	14
Appendix A	Extract from Structure Plan	15
Appendix B	Extract from the Bournemouth, Poole and Christchurch Local Transport Plan	17
Appendix C	Technical Standards for Parking Space Dimensions	20
Appendix D	Parking Zones Map	22
Appendix E	Borough of Poole's Corporate Transportation Policies	22
Appendix F	Summary of Consultation Procedures	23

Contact:

Strategic Planning Services
Civic Centre
Poole BH15 2BH
Tel: (01202) 633298
www.boroughofpoole.com

Note:

This Supplementary Planning Guidance revises a previous version that was adopted in June 1995. It was issued for consultation on two separate occasions. The first consultation draft was issued on 27th July 2002 to update the Council's guidance in relation to revised Planning Policy Guidance Note 13. The second consultation draft was issued in October 2003 and takes account of changes that were necessary as a result of the Poole Local Plan Public Inquiry and subsequent Inspector's recommendations. The draft SPG was adopted by the Council on 19th February 2004. A full account of the consultation process is given in Appendix F.

If you would like this document translated into your own language, please contact the number above giving your full contact details.

Caso deseje receber o presente documento traduzido em seu próprio idioma, queira por favor ligar para o número abaixo dando seus dados completos de contacto.

যদি আপনি আপনার নিজের ভাষায় এই তথ্য অনুবাদ করতে চান, দয়া করে নিম্ন লিখিত নাম্বারে ফোন করে আপনার যোগাযোগের ঠিকানা দিন।

如欲要求把本文件翻譯成中文，請撥以下電話，向我們提供你的詳細聯絡資料。

1 Introduction

1.1 These parking guidelines are SUPPLEMENTARY PLANNING GUIDANCE, prepared by the Borough of Poole to help implement the policies in the Poole Local Plan and the Local Transport Plan. They replace the previous Poole Guidance on Parking, issued in June 1995, and the Parking Guidelines issued by the Highway Authority in January 1997. References to Local Plan policies refer to the Poole Local Plan First Alteration .

1.2 These guidelines will be used by officers and the Council's Planning Committee in determining planning applications in relation to Policy T11 of the Adopted Poole Local Plan First Alteration.

2 Objectives of this Guidance

2.1 This guidance on parking provision will be a major contribution to achieving the objectives of the Local Plan and the Local Transport Plan. Compared to previous guidance there has been a general reduction in recommended car parking provision in new development for most land uses, with the exception of office development in the town centre. These guidelines now allow for some staff and visitor car parking in the town centre whereas the guidance this replaces allowed operational parking only.

2.2 Key objectives of the new guidance are:

- providing developers with much more flexibility and choice
- promoting suitable levels of shared car parking provision on intensive mixed use development in Poole town centre and lower levels of provision on other sites close to public transport nodes and local centres (where there are no adverse traffic impacts).
- discouraging over provision of car parking
- encouraging parking provision for powered two-wheelers (P2W) and bicycles
- promoting a variety of design in residential areas, in accordance with 'Places, Streets and Movement'.
- ensuring the safety of highway users and users of the development
- improving standards of access for people with mobility difficulties

2.2 This guidance mutually supports other Plans and policies within the Borough and conurbation. Implementation of this guidance will:

- Contribute towards the Borough of Poole's Transportation Policy framework including 'reducing the environmental impact of travel and promoting community health'. See Appendix E.
- Contribute to Local Plan targets to limit climate change and promote more sustainable patterns of travel.
- Help meet LTP targets for road traffic reduction.

- Help meet the LTP objective to double cycle usage by the year 2002, using 1992 as a base, and then to double them again by 2012.
- To contribute to the infrastructure necessary to provide a conurbation-wide network of safe cycle routes.

3 Policy Context

3.1 The Borough of Poole has considerable scope to promote more sustainable patterns of travel. In its capacity as both Highway Authority and Local Planning Authority the Council has responsibility for the management of parking controls and pursuing the provision of appropriate levels of parking in new development. The way that the Council exercises its powers in this respect can play an important role in achieving the targets and objectives in the Local Transport Plan and the Poole Local Plan.

3.2 The Bournemouth, Dorset and Poole Structure Plan has sustainable development as its guiding principle, and a key part of its strategy is 'to provide opportunities to meet travel needs in ways which minimise environmental damage and costs, provide maximum choice, and improve safety'. An extract from the Transportation chapter of the Structure Plan is given in Appendix A.

Policy G is the relevant parking policy in the Structure Plan:

'MAXIMUM AND OPERATIONAL MINIMUM PARKING REQUIREMENTS FOR DEVELOPMENT WILL BE ESTABLISHED AT A STRATEGIC LEVEL AND WILL BE APPLIED THROUGH LOCAL PLANS. PARKING REQUIREMENTS ASSOCIATED WITH NEW DEVELOPMENT WILL REFLECT THE LEVEL OF ACCESSIBILITY BY ALL MEANS OF TRANSPORT. WHEN SEEKING TO LIMIT THE LEVEL OF NON-OPERATIONAL CAR PARKING WITHIN NEW DEVELOPMENT PROVISION WILL BE MADE FOR MEASURES WHICH ENCOURAGE AND SUPPORT ALTERNATIVE MEANS OF ACCESS OTHER THAN THE PRIVATE CAR.'

3.3 The Borough of Poole needs to discourage 'unrestrained' use of the car, to prevent congestion and pollution, particularly to locations that are well served by public transport. This is achieved through some of the following mechanisms:

- Promoting sensible car use (e.g., car sharing, avoiding peaks) through the TRAVELWISE Campaign;
- Ensuring Long Stay (commuter) parking is relatively highly priced compared to short-stay parking (for shoppers and visitors);

- Placing conditions on planning applications for new privately owned Central Area public car parks in order to ensure the Council's Parking Strategy is not undermined;
- Promoting the provision of cycle and motorcycle (P2W) parking, particularly at work place destinations and locations that will help to widen the choice of travel modes for residents, visitors and commuters; and
- Promoting the implementation of Travel Plans for occupiers of major new developments (Travel Plans SPG being drafted, February 2002).

3.4 The car parking strategy is set out in section 5.10 of the Bournemouth, Poole and Christchurch Local Transport Plan 2000. This details how neighbouring highways authorities in the conurbation should manage travel demand through on and off-street parking management, Parking Restraint Areas and pricing strategies.

3.5 The Borough's Parking Strategy is in line with wider National and Regional planning advice which is summarised below:

3.6 Planning Policy Guidance Note 13 (PPG13). Local authorities should use parking controls and charges, park and ride, traffic management schemes and travel demand management as instruments to encourage alternatives to the car. Availability of parking has a great influence on the mode of travel used for journeys. Reducing the amount of parking in new development is essential in promoting more sustainable alternative travel choices. The alternatives, however, should also be improved, including more and better cycle parking and cycle routes and improvement measures to key bus routes. PPG13 also provides new national maximum car parking standards, for some types of land-use.

3.7 Local authorities are advised to apply maximum parking standards for car parking and not impose minimum requirements for parking. Authorities should, however, seek minimum standards for cycle parking. Local authority parking standards should:

- Ensure the levels of parking provision promote travel choices;
- Not require developers to provide more spaces than they wish provided road safety issues can be met;
- Encourage shared use of parking spaces between uses that have different demand for spaces during the day (eg office/ cinema);
- Avoid 'perverse incentives' for development to locate outside of town centres through the application of more relaxed standards outside town centres; and
- Require convenient cycle parking in new development at levels consistent with the LTP cycle strategy.

3.8 To help encourage travel by more sustainable modes, PPG13 advises local authorities to seek Travel Plans with major new development schemes. Through planning obligations and/or conditions local authorities should seek to limit the number and impact of motorised journeys. Instead provision for more sustainable modes, such as walking, bus, cycling should be made where possible. Travel Plans offer users of a business or organisation a choice of travel modes to and from the site and encourage more sustainable patterns of movement. The Council has adopted Supplementary Planning Guidance on Travel Plans (April 2003).

3.9 **PPG6.** Local authorities should ensure they have a 'comprehensive strategy and set of policies for the provision and management of parking designed to reinforce the attractiveness and competitiveness of the town centre'. Agreement on parking standards should be sought at the Regional level and town centre locations should not be disadvantaged by an over-provision of parking at out of town locations. Long-term commuter parking in town centre locations should be discouraged in favour of short term visitors such as shoppers. Appendix B contains the relevant explanation from the Local Transport Plan.

3.10 **PPG3.** 'Local authorities should review their standards for residential parking provision and aim to ensure an average of 1.5 spaces per

dwelling is not exceeded. Lower provision should be encouraged in more central locations and in housing for low car-owning groups. 'This advice had led to a lack of clarity both nationally and locally on interpretation of residential car parking maxima. This has now been clarified further through the following ministerial statement which was issued in July 2003:

"Removing barriers: flexibility on car parking

With the right parking policies it is possible to increase densities, reduce pressures on the countryside and produce more sustainable developments. PPG3 advises that car parking standards that result, on average, in development with more than 1.5 off-street car parking spaces per dwelling are unlikely to reflect the Government's emphasis on securing sustainable residential environments. This does not mean the Government expects all dwellings in all new developments to have 1.5 parking spaces. The policy envisages an average over a local authority's area.

The Government accepts that parking needs vary. There will be locations and housing types where significantly lower levels of off-street parking can be sought. But for family housing, and in rural locations where there is heavier reliance on the private car, higher levels of car parking may be appropriate. This is why PPG3 advises that parking polices should be framed with good design in mind, and recognise that car ownership varies with income, age, household type, and the type of housing and its location. To help the development of appropriate standards, the Government will carry out research to consider how varying levels of car parking can be achieved in ways consistent with its policy on sustainable residential environments."

The Council concurs with this statement and believes that the best designs for residential development result from applying the principles of 'Places Streets and Movement' and not by over-restriction of car parking space for residents. Whilst an average of 1.5 spaces per dwelling will be sought through this guidance, there may be special circumstances where provision over this maxima is appropriate for residential development (see paras 4.11-4.16).

3.11 **Regional Planning Guidance for the South West.** The Regional Transport Strategy for the South West sets a strategic transportation framework for Local Transport Plans and Development Plans. The RPG is similar to guidance in PPG 13, but includes regional parking maxima for more land use types. (See Table 4.1) It also applies these car parking maxima to smaller developments than PPG 13. Clear guidance on accessibility standards is given, to ensure that poor locations for development are not permitted. Where development is appropriate, the regional guidance aims to ensure that the majority of potential users have a choice of mode of travel to the site.

3.12 The RPG for the South West identifies the Bournemouth-Poole conurbation as having further capacity for growth, although recognises that outward expansion is limited by its Green Belt and other conservation designations. Within the limits of the conurbation there is potential for higher density development, particularly on brownfield sites in the Central Area of Poole. Major housing and commercial developments in these areas will inevitably create the demand for more trips. Proportionately fewer of these, however, should be car borne when compared to less sustainable Green Field development expansion.

3.13 **Local Transport Plan Proposals.** Unlike smaller towns and rural areas in the South West Region, there is relatively good access to the central area of Poole through a range of travel modes including rail, bus, coach, and cycle. Further choice of mode will be provided by the improvement of existing rail-based park and ride sites (such as those proposed at Wareham and New Milton), new bus-based park & ride sites at Marshes End and Mannings Heath, and a real-time bus information system for bus passengers. Several development agreements have been concluded which incorporate financial contributions for local additions to this system. Both National and Regional Planning Guidance establish car parking maxima for new development, but encourage local authorities to adopt parking standards below these maxima where local circumstances allow.

3.14 There is a need to ensure there is a commensurate improvement of facilities for walking, cycling and other alternative modes of travel. The Bournemouth, Poole and Christchurch Local Transport Plan 2000 sets out short-term and long-term integrated Transport Targets for the conurbation up to 2011. The LTP sets out transportation priorities including improvements to safety and security and implementation of Park & Ride / widening travel choice. Local Plan policies T2 and T3, and text supporting policy T13, identify the types of improvements being sought in considering new proposals for development. Where a proposed development is likely to generate a significant number of trips the Council may require a Transport Assessment to be carried out and active Travel Plans to manage and monitor the travel behaviour of development users. (See para 4.18 examples 8 and 10) The Council may use planning conditions which require car parking provision to be reduced over agreed timescales in line with improvements in accessibility for non-car modes of transport.

4 Parking Guidelines for the Borough of Poole

4.1 MAXIMA FOR CAR PARKING

PPG13 sets out national maximum car parking standards for most non-residential development types. Regional Planning Guidance for the South West covers more development types, and suggests that maximum standards can be applied even to very small developments. In Poole, parking maxima are established within policy T11, and detailed in the Appendices of the Poole Local Plan First Alteration Adopted Plan. These maxima are established within the context of PPG13 and Regional Planning Guidance. They are at, or slightly lower than, the maxima within PPG13, and cover a wider range of land use types, including housing. This document provides advice on appropriate levels of car parking within the maxima established in policy T11 of the Local Plan. It also establishes appropriate levels for cycle and other forms of non car parking.

4.2 The maxima identified in Policy T11 are quoted at table 4.1, show the maxima within the policy compared with those set in PPG13. It can be seen that Poole standards are expressed in terms of 'x spaces per 1000m^2' whereas s PPG13 uses '1 space per ym^2'. Approximate inverse equivalents to the PPG 13 and RPG figures are used in Table 4.1 so they can be easily compared to the Poole maxima. For employee intensive land-uses (offices, factories and universities/ colleges) Poole has lower maxima in Parking Zones 1 and 2, which are established and shown within the Local Plan. Parking Zone 1 is the Town Centre core. Parking Zone 2 comprises Town Centre West, Parkstone/Civic Centre, County Gates and the University at Wallisdown. Parking Zone 3 is the rest of Poole. Appendix D shows these parking Zones within the context of the Borough. These boundaries are shown more clearly on the Poole Local Plan First Alteration Proposals Map. Parking zones 1 and 2 have controlled on-street parking, often in the form of residents' parking schemes. These on-street controls are likely to be extended during the Local Plan period so that controlled on-street parking will then surround PZ1 and 2. However, most of PZ3 is expected to remain uncontrolled, as at present, although some of the local centres may require more control of on-street parking spaces.

Table 4.1:

CAR PARKING MAXIMA AND GUIDELINES FPR MAIN LAND USE TYPES - INCLUDES COMPARISON WITH RGP & PPG3 GUIDANCE

(Based on Policy T11 in the Poole Local Plan First Alteration Adopted Plan)

LAND USE	PPG13 MAXIMA	RPG MAXIMA	POOLE GUIDELINES (as identified in Poole Local Plan First Alteration Adopted Plan) (expressed as X spaces per 1000m² unless otherwise stated)				
	(expressed as X spaces per 1000m² or as otherwise stated)		Parking Zone	Guidance		Maxima	
				Car Low#	Below Threshold	PPG Threshold	Above Threshold
A1 FOOD RETAIL	71	71	ALL	40	60	1000m²	71
A1 NON-FOOD RETAIL	45	45	ALL	20	40	1000m²	35
A1 NON-FOOD RETAIL (DIY)	45	45	ALL	30	50	1000m²	45
CINEMAS/CONFERNCE	20 per 100 seats	20 per 100 seats	ALL	5	20 spaces per 100 seats	1000m²	20 spaces per 100 seats
D2 INCLUDING LEISURE	45	42	ALL	2	45 spaces per 100 seats or 500m²	500m² or 100 seats	45 spaces per 100 seats or 500m²
B1 INCLUDING OFFICES	33	33	1 2 3	3 6 9	12 18 33	2500m²	12 18 33
B2 EMPLOYMENT	No maxima	20	1 2 3	3 6 9	12 18 33	2500m²	12 15 20
B8 WAREHOUSING	No maxima	5	ALL	2	5	2500m²	5
HIGHER/FURTHER EDUCATION	1/2 Staff + 1/15 Students	1/2 Staff	1 2 3	- - -	20 per 100 staff + 6 per 100 students + 30 per 100 staff + 6 per 100 students + 50 per 100 staff + 6 per 100 students +	2500m²	20 per 100 staff + 6 per 100 students + 30 per 100 staff + 6 per 100 students + 50 per 100 staff + 6 per 100 students +
STADIA	1/15 Seats	1/15 Seats	ALL	2	2/100 seats	1500 seats	6/100 seats

Note: # These figures are thresholds, below which specific caution must be exercised. Proposals with provision below these thresholds must demonstrate that the development can suitably function for 'car free' use or very low car use.

Table 4.2:
CAR PARKING MAXIMA AND GUIDELINES - FOR RESIDENTIAL DEVELOPMENT AND LAND USES NOT COVERED BY PPG13/RPG.

LAND USE	POOLE GUIDELINES (as identified in Poole Local Plan First Alteration Adopted Plan) (expressed as X spaces per 1000m² unless otherwise stated)		
	Parking Zone	Car Low	Maxima (No thresholds)
A2 FINANCIAL & PROFESSIONAL (Banks, betting office, estate agents etc)	ALL	20	**35**
A3 FOOD & DRINK (including restaurants & pubs)	1 & 2 3	40 60	**70** **100**
C1 HOTELS (including guest houses)	ALL	60	**120 per 100 bedrooms**
C2 RESIDENTIAL INSTITUTIONS (Residential schools, colleges)	ALL	Schools (including residential and non-residential) require a Transport Assessment to determine parking provision.	
C2 (Hospitals, Nursing Homes)	ALL	16	**22 per 100 bedrooms**
C3 DWELLING HOUSES (includes houses, flats and communal)	1 2 3	1 1.2 1.5	**2** **2.5** **3**
D1 NON RES. INSTITUTIONS (Public Halls, Libraries)	ALL	5	**20**
D1 (Clinics, Health Centres)	ALL	2	**4 per consulting room**
D1 Schools	ALL	Schools (including residential and non-residential) require a Transport Assessment to determine parking provision.	
SUI GENERIS (wholesalers)	ALL	20	**35**
SUI GENERIS (Garage showrooms)	ALL	5	**10**
SUI GENERIS (Garage workshops)	ALL	25	**40**

4.3 Within Poole there is scope to have some geographical variation in the level of maximum parking standards within the Borough, particularly to discourage the over-provision of commuter parking in the town centre. Such a framework is in line with the Local Transport Plan strategy of encouraging a shift from car use to the use of other modes of transport where alternatives exist.

4.4 PPG13 warns that adopting lower provision of car parking in town centres may perversely encourage development elsewhere. This is a particular concern for office development. However Structure Plan Policy requires that all major office development (2000m²+) shall be located in Bournemouth or Poole town centres or the Airport Site. Development at the Airport is likely to be allocated more car parking

than would be sensible in the town centres, but substantial developer contributions will be required for transport infrastructure and services.

4.5 Operational threshold guidelines are applied to assist developers and are highlighted as 'Low Car' in Tables 4.1 & 4.2. These figures are thresholds, below which specific caution must be exercised. Proposals with provision below these thresholds must demonstrate that the development can suitably function for 'car free' use or low car use. These thresholds should ***not*** *be interpreted as* ***minimum*** *standards for parking provision.*

Guidelines for Non-Car Modes

4.6 The guidelines for non-car modes of transport are quoted as minima in Table 4.3, and may be exceeded. Provision for cycles and Powered Two Wheelers (P2Ws) should be increased where car-parking provision is low. Provision of excessive spaces for non-car modes are very unlikely, and in any case would not generate significant traffic flows. Technical guidance on appropriate dimensions for car parking (including disabled) and cycle parking are given in Appendix C.

4.7 Separate marked spaces for cycles and P2W will not normally be set out with houses, but for grouped parking provided with flats secure parking for both modes will be required. Where car-free housing is provided, specific provision for cycles will be an essential feature of the development.

4.8 Where a site does not allow full provision for non-car parking, the commuted payments system may be used to facilitate provision of the development.

Disabled Parking Provision

4.9 Table 4.3 sets out minimum standards of disabled car parking provision for non-residential uses. Where shared parking is provided in residential development at least 10% of these spaces should be provided to disabled dimensions (See Appendix C). Where dwelling houses are provided with parking within curtilage, at least one of the parking spaces should be to disabled parking dimensions or allow practical access to the dwelling by a wheelchair user.

Summary of Approach

4.10 Tables 4.1 & 4.2 summarise all car parking guidelines, whilst all non-car parking provision is shown in Table 4.3. These give developers far more flexibility that the January 1997 guidelines. However, a planning application with car parking provision within the range shown will not always be acceptable, and the guidelines need to be interpreted sensibly. The examples listed should help developers understand the principles involved. Table 4.1 shows the guidelines to be used for car parking provision for development below (and above) the PPG13 threshold levels. There are no PPG 13 threshold levels for B2 and B8 land uses, so Poole has adopted the B1 threshold from PPG13, which is 2500m^2. The guidelines in Tables 4.1 & 4.2 are similar to those used by Bournemouth Borough Council.

Table 4.3

SUMMARY OF POOLE PARKING GUIDELINES FOR NON-CAR MODES

Use	Type	Unit (m^2 in GFA)	Parking Zone	Disabled	Lorries	Coaches	P2W (Powered 2 Wheelers)	Cycles
A1 Shops	Food	1000m^2	ALL	3	1	0	3	10
	Non-Food	1000m^2	ALL	3	1	0	2	6
	DIY Store	1000m^2	ALL	3	1	0	2	6
A2 Financial & Professional	Banks, Betting Office, Estate Agent etc.	1000m^2	ALL	2	0	0	2	8
A3 Food and Drink	Restaurants, Pubs	1000m^2	ALL	3	0	C	3	20
B1 Business	Offices	1000m^2	1	1	0	0	3	12
	R & D		2	1	1	0	3	9
	Light Industrial		3	1	1	0	3	6
B2 General Industrial	General Industrial	1000m^2	1	1	1	0	3	14
			2	1	1	0	3	12
			3	1	2	0	3	10
B8 Storage & Distribution	Warehouses & Storage (B8)	1000m^2	ALL	1	4	0	1	4
C1 Hotels	Hotels & Guest Houses	100 Bedrooms	ALL	6	0	2	5	10
C2 Residential Institutions	Residential Schools, Colleges	Staff/Students - 100 Bedrooms	ALL	6	0	1	5	20
	Hospitals, Nursing Homes	100 Bedrooms	ALL	4	0	C	X	10
C3 Dwelling Houses	Includes houses, flats and communal	Dwelling	1	*	0	0	X	1
			2	*	0	0	X	1
			3	*	0	0	X	1
D1 Non Residential Institutions	Public Halls, Libraries	100 Seats or 500m^2	ALL	5	0	1	3	6
	Clinics, Health Centres	Consulting room	ALL	0.25	0	0	0.25	0.5
	Schools		See Note A Below					
D2 Assembly & Leisure (including Theatres)	Theatres, Cinemas, Dance & Sports Halls	100 Seats or 500m^2	ALL	5	0	1	3	6
	Stadia	100 Seats	ALL	5	0	1	3	6
Sui Genris	Wholesalers	1000m^2	ALL		1	0	2	6
	Garage Showrooms	1000m^2	ALL	1	1	0	1	2
	Garage Workshops	1000m^2	ALL	2	1	0	3	6

*** See paragraph 4.9**

C: Coach numbers assessed on merit - minibus spaces may be sufficient for some land uses

X: Separate spaces for Powered Two Wheelers are not essential, as car spaces can be used

NOTE A: Schools (residential and non-res.) require a transport assessment to determine parking provision

Implementation of the Guidance

4.11 Mixed development is encouraged, especially in parking Zones 1 & 2, as it will often be possible to provide significantly less car parking than the individual development elements would require. The car parking maxima refer to off street spaces provided solely for users of the development. Thus if a development includes a public car park or on-street spaces, these may be permitted in addition to the maxima quoted. An example is given below for offices in the town centre (example 7).

4.12 Levels of parking in residential development will be required to be below the maxima identified in table 4.2. Exceptions will only be allowed for provision above 3 spaces per dwelling in parking Zone 3 where the proposal is for large family housing (4 or more bedrooms per dwelling).

4.13 The Council will seek an average provision of 1.5 spaces per dwelling across the Borough in line with advice set out at paragraph 62 of Planning Policy Guidance Note 3. This will be achieved by promoting generally lower car parking provision in Parking Zones 1 & 2 which are more accessible by alternatives to the car and are likely to accommodate higher development densities than suburban areas. Approximately 4,700 dwellings are expected to be built in the central area of Poole up to 2016 (an area predominantly covered by parking zones 1 & 2). Between 75-81% of these are expected to be 1 & 2

bedroom dwellings, where the average car parking provision will be 1.5 or less. The table below gives clear guidance to developers on the average car parking provision to be provided for different dwelling sizes in the 3 parking zones. Parking provision, on average, is therefore expected to be lower than 1.5 spaces per dwelling in parking zones 1 & 2 and higher in zone 3. It is expected that residential development within the Borough over the Local Plan period will result in an average provision of 1.5 spaces per dwelling for Poole. [Source for dwelling mix and numbers: Central Area Demographic Projections Model, Strategic Planning Services].

AVERAGE residential car parking provision sought, by dwelling size and location		
	Parking Zone	
Bedrooms per dwelling (inc flats and houses)	1 & 2	3
1	1.1	1.5
2 & 3	1.3	2
4 & 5+	1.5	2.5

4.14 The table above demonstrates that, for residential development in PZ1 and PZ2, car parking provision of 1 to 1.5 spaces per unit will be

encouraged, especially where visitor parking can occur in a public car park, thus sharing space with other land uses. Low car parking, below 1 space per unit, on-site, may be permitted in PZ1 and PZ2 provided that appropriate mitigation is provided. This may include:

(i) Exclusion of the development's residents from the local Residents' Parking Scheme.

(ii) Alterations to on-street parking arrangements

(iii) Operation of a pool car or Car Club scheme

(iv) An active Residential Travel Plan

(v) Providing or funding residential car parking in a nearby public car park

4.15 In parking zone 3, provision of slightly above 1.5 spaces per dwelling is anticipated. This is partly a reflection higher proportion of family dwellings that is anticipated (approximately 27% of dwellings are assumed to be 3 bedroomed or more, based on the Council's 2002/3 Housing Programme mix targets). It is also likely to be off-set by generally lower than average provision in parking zones 1 & 2.

4.16 To date the Council has not monitored the level of parking provision in new residential development. As part of its annual monitoring, parking provision in new residential development will be recorded from April 2004. If in the course of monitoring, the Borough is achieving an average provision significantly above 1.5, the Council will re-examine advice in this SPG in relation to residential parking.

4.17 Larger commercial and residential developments will benefit from a Travel Plan, usually to be part of a legal agreement associated with planning consent. Poole has Supplementary Planning Guidance on Travel Plans, which gives detailed advice on the scale of development which requires a Travel Plan and other circumstances where a Travel Plan is likely to be required. Recent experience of residential developments with low car parking provision has shown that all developments of 50 dwellings or more should be required to produce an active Residential Travel Plan, and in some circumstances, it will be a requirement for smaller developments. (See Example 10 below)

4.18 Examples of how this guidance may be applied to individual situations are listed as follows:

1. Variety of Provision in Residential Layouts

Four developers propose large family homes in PZ3. One is a mews court arrangement, served by a private drive and 1.5 car spaces per household, another proposes 4 car spaces per house, including 10% of the total car parking spaces on the proposed new "conventional" highway, the third development has 3.5 car spaces per dwelling, with variable width carriageway access, the fourth has 2.5 car spaces per dwelling, but 60% of these are in a shared area, not individually allocated.

All four developments make good use of their respective sites and have minimal adverse impact on adjacent residential areas. Thus, even though two of the developments have car parking above the guideline maxima, they are considered acceptable in parking zone 3.

2. Residential Parking Provision in the Town Centre

14 two bedroom flats are proposed in the town centre (PZ1) with only 10 car parking spaces. The development is acceptable in parking terms because the development is fairly small scale, and within a controlled parking zone. Also, 10 cycle and 4 P2W spaces are provided, plus a contribution to public transport infrastructure. The same development, in PZ3, would not be acceptable, as excess cars would be likely to park on the highway. Now consider 14 two bedroom flats with 14 car parking spaces in PZ1. This is within the guideline range for car parking provision, but would not be acceptable without provision for cycle parking and/or P2W unless an active Residential Travel Plan were included. However, it is unlikely that developers would be prepared to fund this for such a small development.

3. Low and No Car Residential Development

Generally, 'no-car' development will only be practical in PZ1. 'Low-car' residential development (1 to 1.5 spaces per unit) is encouraged in PZ1 and PZ2, and may also be acceptable in local centres in PZ3.

In PZ1, a developer successfully proposes 30 one/two bedroom flats with secure cycle parking for 50 bikes and 3 car parking spaces for proposed "car club" use. There is a public car park nearby if residents wish to use it (and pay to park) but the Highway Authority excludes the development from the Old Town Residents On-Street Parking Scheme, because of the problems explained in 4.11.above.

4. No Car Housing with no Provision for Non-Car Modes

An application proposes 50 dwellings in PZ2 with no car parking. The applicant quotes PPG13 to argue that the authority should not impose more car parking than the developer wishes. The authority refuses the application as it is outside the guidelines, no non-car provision is offered, and it would be likely to cause parking problems on the highway. However, a similar application supported by a Residential Travel Plan incorporating a detailed, practical, Car Club proposal would be supported.

5. Less Car Parking in Developments near Local Centres

Most of the Borough's 20 local centres (as identified in the Local Plan, see Appendix D) are within Parking Zone 3. These centres provide most day to day retailing and services for their localities. In considering new development within Local Centres or easy walking distance* of them, low car parking provision will be particularly encouraged by the Council, where such levels will not result in an unacceptable demand for on-street parking (see 4.2).

**Note: Easy walking distance is generally accepted to be 400m for people without mobility difficulties.*

For example, a developer proposes a block of three bedroom flats with 1.5 car spaces per flat in Broadstone local centre (PZ3). The authority objects as the development is likely to cause overspill parking and hazards on the highway. The developer changes the proposal to one/two bedroom flats with 1.3 spaces per flat. The authority accepts the proposal, even though the car parking provision is lower than the guideline threshold in Table 4.2.

6. Negotiated Payments for Parking

Negotiated contributions involving parking will be based on the Commuted Parking Payments Policy agreed by Poole's Planning and Transportation Committee on 28th May 1998. A proposed 100 bed hotel wishes to provide 100 car parking spaces, which is acceptable, but cannot fit in the required 2 coach spaces. The authority negotiates a contribution to provide the coach spaces at the Stadium Coach Park. (2 x £16,000 = £32,000)

A developer is converting a listed building to mixed office and residential use residential use. The developer and authority both agree that 8 car parking spaces are needed but only 5 can be provided on site without harming the setting of the listed building, the authority agrees to take 3 x (0.75 x £8000) = £18,000 to provide the car parking spaces nearby. Note that the 1998 Policy allows for these amounts to be increased by inflation.

7. Offices

The maxima for car parking introduced by PPG13 are a radical reduction compared to the car parking provision that most office developers were seeking. In Poole Town Centre (PZ1 and PZ2) high density mixed development is proposed in the Local Plan, and office uses are an essential part of that mix. Considerably flexibility is offered to office developers, as shown by the following example:

A 3,000m² office building is proposed in the PZ1 part of Poole Town Centre. The highway authority offers four alternative methods of providing car parking:

(i) provide 36 car spaces on site, the maximum exclusive use spaces allowed

(ii) provide 36 exclusive and 64 public car parking spaces on site (i.e., 100 spaces, the PPG13 maxima)

(iii) combine the development with an adjacent site and share as many car spaces as is practical between the two uses.

(iv) Provide 36 exclusive spaces on site and an extension of 64 spaces at one of the designated public parking areas around the regeneration area. These office workers would park and walk to work.

Additional choices will be offered to existing local office employers who wish to expand on their existing site. For example, if the employer is considering relocating from PZ1 to PZ3 to secure sufficient car parking spaces this may result in more employees driving to work. In these circumstances, additional exclusive car parking may be permitted on the existing site in PZ1, especially if the number of spaces can be reduced over time with a Travel Plan (see 8 below). However, permanent car parking provision in excess of the national PPG13 maxima will not be permitted.

8. Travel Plans/Car Parking above maxima

Separate Supplementary Planning Guidance is being prepared for Travel Plans. The following example shows how a travel plan might form part of an agreement to reduce car parking provision on a site:

A developer has planning permission for 15,000m² of B1 industry in PZ3, with 495 car spaces, the maximum permitted. However, to secure his first occupier, he proposed to phase construction of the units, and provides an additional temporary 100 spaces on the site of one unit. Four-year temporary permission is granted for the extra spaces subject to a site Travel Plan which has targets for reducing the car traffic attracted to the site and financial penalties for non-compliance.

9. Developments Below PPG13 thresholds

A developer seeks a small 50m² extension to a 5000m² industrial B2 building. The authority uses Table 4.3 to assess how many additional car parking spaces will be required and Table 4.2 to assess how many additional spaces for other modes will be required.

Another developer seeks permission for a 2499m² B1 office development, in PZ3, and argues that 92 car spaces can be provided, based on Table 4.3. However, a 2500m² development would be subject to the national PPG13 limit of 83 car parking spaces, and the authority would resist the development, on the grounds of over provision of car parking. It might be acceptable with an appropriate Travel Plan.

10. Residential Travel Plans

A developer proposes 30 two bedroom flats with 30 cycle spaces and 10 car parking spaces in PZ1, in an area covered by a residents' parking scheme. The developer argues that the development is below the 50 dwelling threshold requiring a Travel Plan, and the provision of cycle spaces is sufficient mitigation. The authority refuses the application, as it would cause excessive car parking demand on the adjacent highways, and argues that an active Residential Travel Plan is required to minimise the highway risks

11. Exceptions

Where the transport operational needs of an occupier are unique / exceptional, but clearly in the public interest, the parking requirements will be assessed as sui generis, even though the type of building proposed is conventional. Examples include developments for the emergency services, including such organisations as RNLI.

5 Car Parking and Access onto Primary and Distributor Roads

Car Parking and Access onto Primary and Distributor Routes

5.1 This section provides further interpretation of paragraph 7.72a in the Poole Local Plan First Alteration, which states that further access points to Primary and Distributor routes will be resisted, but may be acceptable in some circumstances (see 5.3 below). On these routes high priority is generally given to vehicle movements and parking and access points are strictly restricted in the interests of highway safety. On primary, county distributor, district distributor and local distributor routes, as defined in the Local Plan, access, parking and turning movements will generally be severely restricted. Major developments which generate traffic levels of more than 2000 vehicle movements per day will, exceptionally, be permitted a new junction, usually signal controlled for safety.

5.2 However, there are many lengths of primary and distributor routes which are all-purpose roads, with almost continuous frontage access, e.g. the A35 primary route through Parkstone. It could be argued that, on a road where there are many residential accesses, one more, is unlikely to cause a significant reduction in safety. In some cases it will possible to replace on-street parking by off street parking which may improve safety.

5.3 On lengths of such routes where there are already numerous accesses (more than 5 per 100m on one side) additional vehicular accesses may be permitted where:-

(i) a safety audit finds no significant increase in accident risk

(ii) there is no practical alternative access, acceptable to the Highway Authority.

(iii) Adequate on-site turning facilities are provided.

Appendix A

EXTRACT FROM STRUCTURE PLAN

Parking

8.24

The provision of car parking is a critical element in the delivery of a more sustainable approach to transportation. Promotion of alternatives to the car will have little effect without parallel measures to manage and control motor traffic. The availability of car parking has a major influence on modal choice to the extent that its availability can be more significant than the level of public transport provision in determining the mode of travel, even for locations that are well served by public transport.

8.25

Car parking strategies should be tailored to suit local conditions but will support the integrated transport strategy and the locational policies of development plans, discourage car-based commuting and encourage the use of alternative modes of travel into central urban areas, and reinforce the attractiveness and competitiveness of town centres.

8.26

The promotion of park and ride schemes should discourage car-based commuting into central urban areas, particularly where this is combined with restrictions on long stay commuter parking in town centres. The control and pricing of parking will also play a significant part, and wherever the opportunity arises, the management of private non-residential parking areas will be brought within the scope of the overall management strategy. Provision of cycle parking should also be increased, particularly within town centre locations, at park and ride sites and close to major developments.

8.27

The parking strategy for an area will be dependent on the existing mix of shopping and employment and the level of development proposed. The strategy will also take account of the needs of the disabled, residents and tourists, and will include a range of measures to influence the pattern of parking; these will include the use of parking information systems, which also cater for tourists during the main holiday season, when demand for parking increases substantially. There will be a need to ensure that restraint in parking provision is supported by adequate enforcement measures and an appropriate pricing regime for public off-street car parks.

8.28

Overnight parking facilities are often required to meet the needs of long distance commercial traffic. In the absence of such facilities, indiscriminate parking may occur in unsuitable locations. To reduce the undesirable effects of heavy goods vehicles on local communities, overnight lorry parks should be provided at appropriate sites adjacent to the strategic highway network.

TRANSPORTATION POLICY F

AN EFFECTIVE CAR PARKING STRATEGY WILL BE DEVELOPED TO SUPPORT THE INTEGRATED STRATEGY FOR MOVEMENT AND THE LOCATIONAL POLICIES OF DEVELOPMENT PLANS. IN THE BOURNEMOUTH-POOLE CONURBATION AND THE MAIN TOWNS AS DEFINED IN SETTLEMENT POLICIES B AND C AND PARTICULARLY WHERE INTEGRATED PACKAGES ARE INTRODUCED, THE PARKING STRATEGY WILL PLAY A KEY ROLE IN CONTROLLING THE RATE OF TRAFFIC GROWTH AND PROMOTING PUBLIC TRANSPORT AND OTHER ALTERNATIVES TO THE PRIVATE CAR BY:

I) PROMOTING RAIL OR BUS BASED PARK AND RIDE SITES;

II) RESTRICTION OF LONG STAY COMMUTER CAR PARKING IN TOWN CENTRES;

III) CONTROL AND PRICING OF ON-STREET AND OFF-STREET PARKING;

IV) REDUCTION OF LEVELS OF CAR PARKING PROVISION IN NEW NON- RESIDENTIAL DEVELOPMENTS;

V) PROVIDING FOR SECURE OVERNIGHT LORRY PARKING;

VI) A MAJOR INCREASE IN SECURE CYCLE PARKING PROVISION; AND

VII) PARKING INFORMATION SYSTEMS WHICH CATER FOR TOURISTS.

8.29

The local highways authorities will provide strategic guidance on car parking and cycle parking standards for new development. Car parking standards will be expressed in terms of maximum and minimum operational provision

for different classes of development, and will be kept under review. The car parking provision associated with new development should initially be limited to the minimum necessary to enable the development to function operationally. Reduced requirements for parking in locations which have good access to other means of travel than the private car will be adopted. If the promoter of a proposed development seeks car parking provision above the operational requirement for that development, the promoter will have to justify the higher level of provision. There will be a need to ensure that the car parking provision will not adversely affect road safety.

8.30

The promoter of a development will be required to demonstrate that the green transport plan put forward to support the proposal will maximise the modal split in favour of alternatives to the private car. This will include details not only of any new infrastructure proposed as part of the development proposal, but also of measures which encourage and support alternative means of access other than the private car.

TRANSPORTATION POLICY G

MAXIMUM AND OPERATIONAL MINIMUM PARKING REQUIREMENTS FOR DEVELOPMENT WILL BE ESTABLISHED AT A STRATEGIC LEVEL AND WILL BE APPLIED THROUGH LOCAL PLANS. PARKING REQUIREMENTS ASSOCIATED WITH NEW DEVELOPMENT WILL REFLECT THE LEVEL OF ACCESSIBILITY BY ALL MEANS OF TRANSPORT. WHEN SEEKING TO LIMIT THE LEVEL OF NON-OPERATIONAL CAR PARKING WITHIN NEW DEVELOPMENT PROVISION WILL BE MADE FOR MEASURES WHICH ENCOURAGE AND SUPPORT ALTERNATIVE MEANS OF ACCESS OTHER THAN THE PRIVATE CAR.

8.31

It is important that parking control aimed at reducing motorised traffic does not have a detrimental effect on the economic and commercial viability of town centres. The level of parking provided for each town will need to be considered within the context of the overall transport strategy for the area, and that of adjoining authorities. The strategies which emerge from these plans will ensure that the vitality and viability of each town centre is not compromised through competitive policies in neighbouring authorities.

TRANSPORTATION POLICY H

PARKING STANDARDS AND STRATEGIES WILL AVOID PREJUDICING THE STRATEGIC DEVELOPMENT AIMS OF ADJOINING LOCAL AUTHORITIES AND AVOID COMPETITION BETWEEN TOWN CENTRES AND OUT OF TOWN LOCATIONS.

Appendix B

EXTRACT FROM THE BORNEMOUTH, POOLE AND CHRISTCHURCH LOCAL TRANSPORT PLAN

5.10 RESTRAINING USE OF THE MOTOR CAR (PARKING)

POLICY

5.10.1 The control of the use of the motorcar is one of the most emotive issues to be addressed in the LTP. It needs to be considered and dealt with carefully to ensure public perception is not that the Councils are "anti-car" but rather that they wish to curb unrestrained use of the motorcar for unnecessary journeys.

5.10.2 To this end a number of policies have been developed that deal with the following issues:

- Give preference to short over long-stay parking
- Central pricing structures to reduce peak hour traffic problems
- Introduction of residents parking schemes
- The needs of disabled drivers
- The use of Controlled Parking Zones (CPZs) to manage parking

5.10.3 **PROBLEMS**

- To balance the needs of the community with the environmental damage that the encouragement of the use of the motor vehicle causes
- Meeting the needs of disabled people and elderly drivers
- Sustaining economic development
- The seasonal impact of tourism

5.10.4 **OPPORTUNITIES**

- Decriminalisation of parking enforcement
- Council control of car parks
- Development control policies and PPG13
- On-street parking control

5.10.5 **INDICATORS**

- Number of long-short stay parking spaces available
- Pricing strategy
- Development of car parking guidelines
- Park and Ride spaces

5.10.6 **AIMS AND OBJECTIVES**

1. Reduce the environmental impact of travel and promote community health

- By demand restraint commuters will be encouraged onto sustainable transport modes

2. Improve safety and security for all who wish to travel. Those that need to use their car must be helped to feel safe by:

- Improved lighting and security for vulnerable car users at all public car parks

3. Support an efficient and prosperous local economy with growth in appropriate areas

- By providing short stay parking for shoppers and tourists
- By the provision of Park and Ride for commuters

4. Provide equality and accessibility for the whole community. Whilst introducing restraint measures for general and commuter traffic, minority groups should be catered for:

- Provision for disabled motorists at public car parks
- Supporting Shopmobility
- Providing on-street parking for disabled drivers

STRATEGY

Workplace Parking Levy and Road User Charging

5.10.7 The Councils recognise the strategy outlined in the DETR publication "Breaking the Log Jam" for managing travel demand through pricing mechanisms and acknowledges the attraction of revenue generation

to support the Local Transport Plan objectives. The Councils are also mindful of the Government's aims to revitalise cities by concentrating development in existing urban areas and to protect and preserve Greenfield sites. It is essential that the conurbation remains attractive to developers, businesses and tourists.

5.10.8 It is acknowledged that charging regimes for both off and on-street parking can be used to influence behaviour, choice and consequently demand. Charging therefore is a potential means of managing traffic congestion.

5.10.9 Whilst recognising the principles of charges it is the Council's priority to attract developers and businesses and to work in partnership with them to reduce travel demand. The Councils will study the outcomes from the Workplace Parking Levy and Road User Charging pilots and trials and their impacts on the test sites but will not include the introduction of either the levy or charge in the life of this five-year Plan.

5.10.10 The economic well being of the area is heavily dependent upon the "Visitor", e.g. tourism, shopping. The inevitable conflict between the need of the commuter and the long stay visitor remains a significant influence on introduction of prohibitive measures until suitable, acceptable alternative options are available to the traveller.

Parking Restraint Areas

5.10.11 Parking Restraint Areas have been defined in which the needs of shoppers and visitors will have priority over the needs of commuters. There is a clear link with land-use policies such as the restriction of employee parking in new development and the introduction of new Parking Restraint Areas; this is covered under Section 5.10.

5.10.12 In and adjacent to Parking Restraint Areas controls will be introduced for on-street parking. The following measures will be introduced where appropriate:

a) Preferential residents parking schemes
b) Pricing of on-street spaces
c) Parking bans to provide for public transport, cycle or disabled facilities
d) Time limits to discourage all day parking

Pricing Strategy

5.10.13 Parking charges can be an emotive subject with local residents and commuters as well as being commercially very important for town centre retail outlets, leisure and tourism. In the conurbation the town centre areas have mixed use development with residential, commercial, leisure and tourism uses all competing for the same parking provision. Therefore the management of a pricing structure to discourage long-stay commuter journeys has to be sensitively balanced with the other important uses.

5.10.14 The three main centres of Bournemouth, Poole and Christchurch differ in size and the types of parking demand, so inevitably there will be differences in the style and progress of the parking strategies in each area. Nevertheless the following elements of pricing control will be used to promote the objectives of the LTP with regard to the increased usage of sustainable transport modes:

- Prices in local authority controlled car parks will be adjusted to encourage use of the highway network during the times when there is sample spare capacity and to discourage use at peak periods.
- In Parking Restraint Areas, the price of long-stay car parking will be gradually increased in real terms and the number of

long-stay spaces will be reduced by converting them to short-stay.

- Revised pricing structures will be undertaken concurrently with improved public transport provision.
- The cost of Car Park Season tickets will be increased above the inflation/cost of living increase and the numbers of tickets issues will be limited.

Decriminalisation of Parking Enforcement

5.10.15 Parking controls and their enforcement are considered to play a major role in managing road space and achieving national integrated transport strategies. There are many concerns over the current limitations in enforcement and its consequent adverse effects on traffic management. Discussions are in-hand between all the authorities and the police in respect of decriminalisation of parking and the possibility of the Highway Authorities taking over control of parking enforcement if the Traffic Warden service is withdrawn in the future.

5.10.16 Officers have met with the Police. The policy of the Chief Constable is outlined as " ….. to encourage the Local Authorities to consider Decriminalisation in line with Government policy." The Police Group will consider, inter alia, implications of losing the Traffic Wardens as a resource, and other options/opportunities for provision of a decriminalised service.

5.10.17 The dates targeted for implementation of Decriminalisation are as follows:

Bournemouth	April 2001
Poole	April 2002
Christchurch	April 2002

5.10.18 The Joint Member Transport Policy Group will consider whether some activities offer cost savings through joint working, e.g. towing, storage, clamping, etc. and officers of the three authorities are to investigate the potential for this further.

Revenue Implications

5.10.19 Introduction of Decriminalised Parking Enforcement is estimated to generate setting-up costs of £205,000 over the current year with an additional Project Officer costing approximately £25,000 this year. The additional revenue costs of the service is estimated at £65,000 per annum until additional revenue is generated from introduction of on-street charging systems during the plan period.

NOTE: Since the Local Transport Plan was published, Decriminalised Parking has been introduced across the conurbation, with implementation in Poole in April 2002.

Appendix C

TECHNICAL STANDARDS FOR PARKING SPACE DIMENSIONS

Note: Parking facilities shall be sited in a secure location and covered. Details to be agreed with LPA.

PARKING AREAS

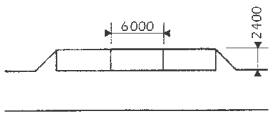

MINIMUM PARALLEL PARKING BAYS

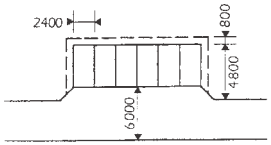

MINIMUM PERPENDICULAR PARKING BAYS

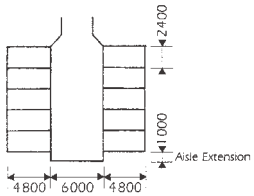

MINIMUM GROUPED PARKING BAYS

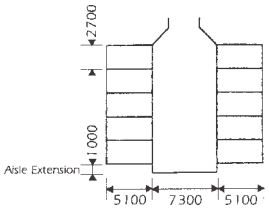

MINIMUM GARAGE COURT AREA

45°

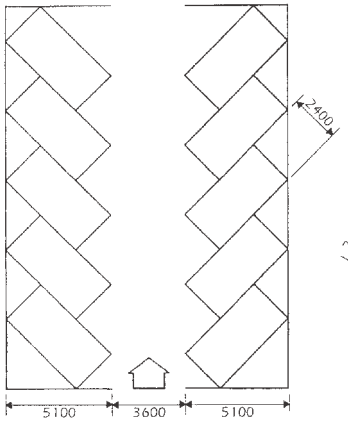

60°

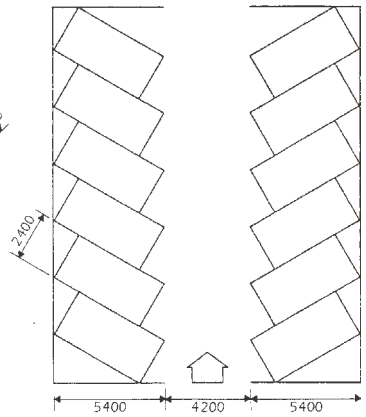

Notes: Car spaces can only be interlocked properly at 45°. Angled parking spaces should be on a one-way system.

Landscaping proposals should be submitted with all applications in accordance with details indicated in paragraph 2.11.

PARKING SPACES FOR THOSE WITH A MOBILITY HANDICAP

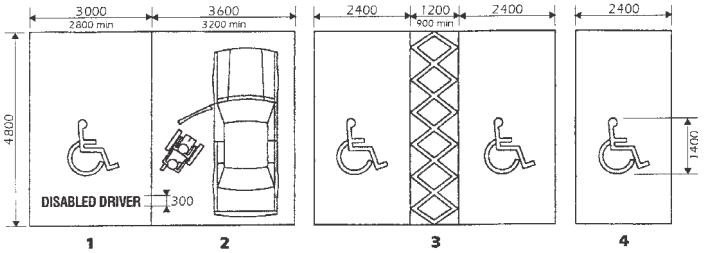

1 Ambulant disabled user - only where space is limited. Full width for wheel chair user preferred, particularly in public car parks.

2 Wheelchair user.

3 Marked out shared space between two standard bays.

4 Standard end bay with long side open for access.

PARKING SPACE, GARAGE AND FORECOURT DIMENSIONS

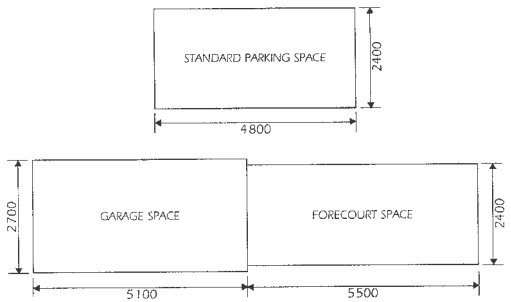

Note: All dimensions shown in millimetres

CYCLE PARKING FACILITIES

Figure 1
"Sheffield" type stand

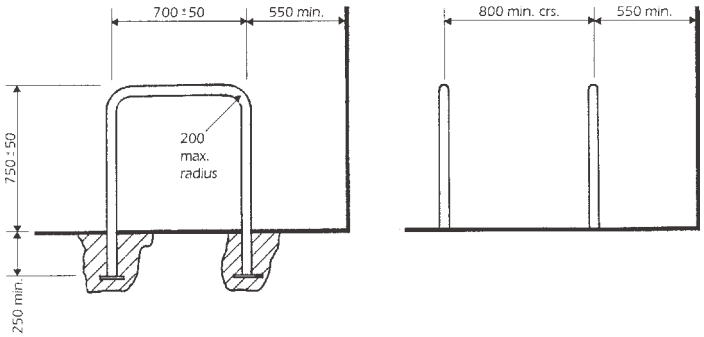

Figure 2
Wall stand

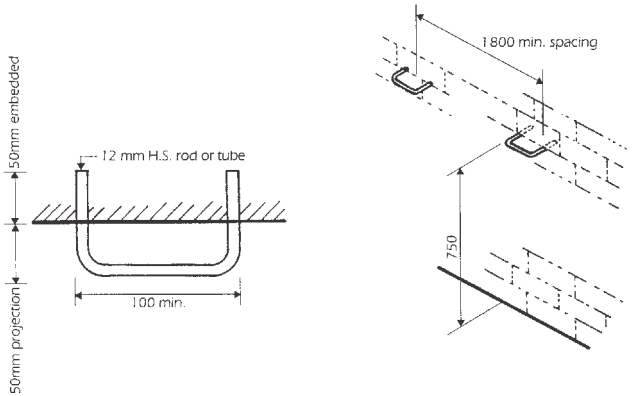

Figure 3
Typical cycle parking stand layout

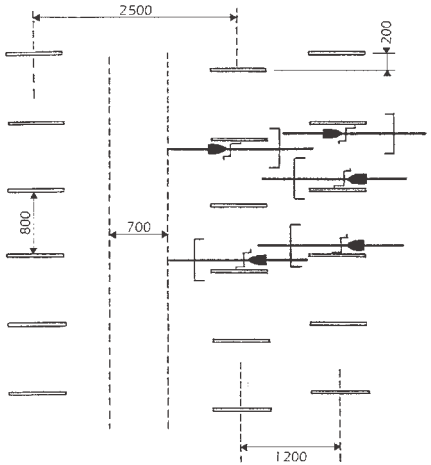

Figure 4
Typical cycle parking stand layout

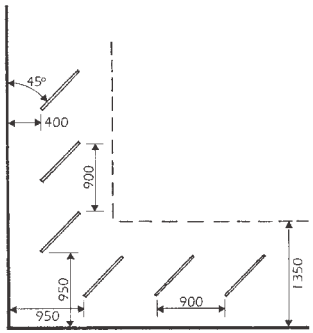

Note: The dimensions given in figures 3 and 4 will give an optimum use of space. If closer spacing is used, problems may arise because of carelessly parked cycles obstructing some stands. Dimensions may be increased where space is not limited.

Note: All dimensions shown in millimetres

Appendix D

PARKING ZONES

(Including location of Local Centres as designated in the Poole Local PlanFirst Alteration)

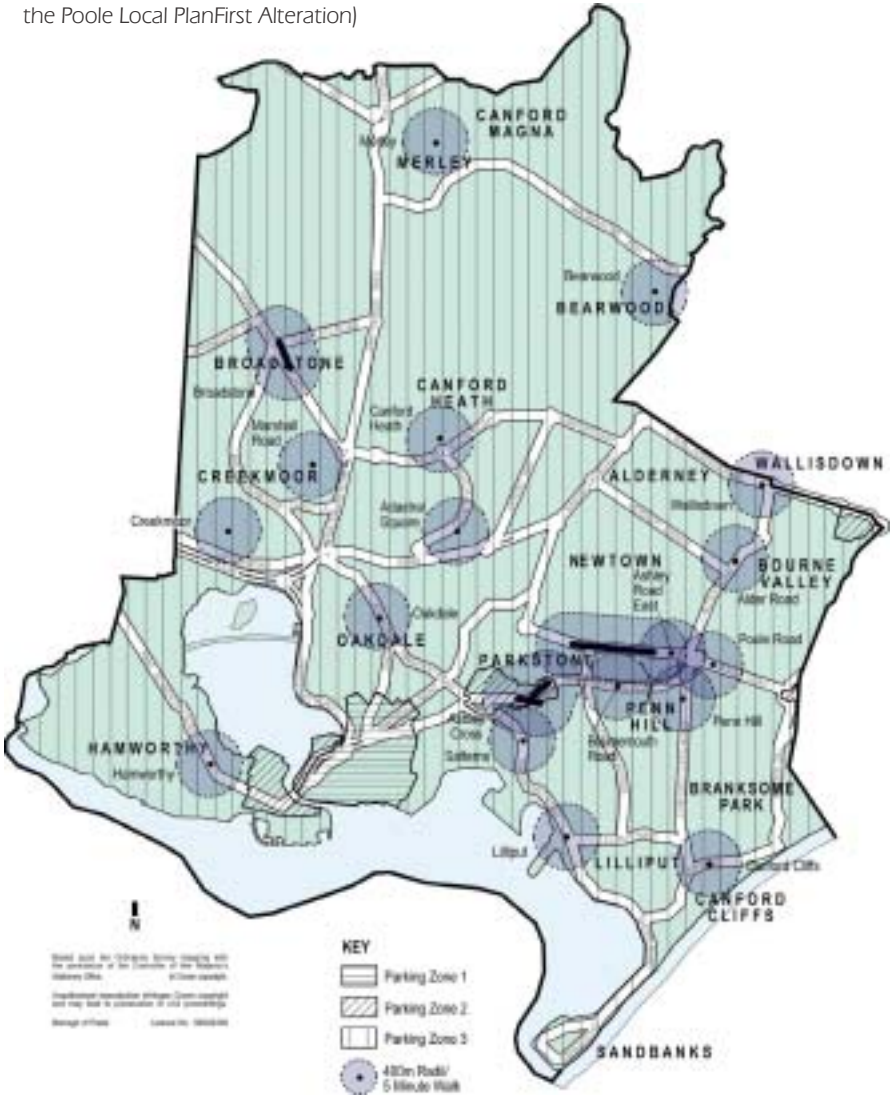

Appendix E

THE BOROUGH OF POOLE'S TRANSPORTATION POLICY FRAMEWORK

The Poole Local Plan and Bournemouth, Poole and Christchurch Local Transport Plan 2000 embody a transportation strategy which seeks to facilitate accessibility and economic development in a safe and sustainable way. This is perhaps the most difficult area of policy because both national and local policy is trying to secure a substantial shift in behaviour. As a result the Council established an Environment Policy Board to consider the issue and the result of their deliberations has made an important contribution to the Local Plan Review:

i. Reduce the environmental impact of travel and promote community health;

ii. Improve safety and security for all who wish to travel;

iii. Support an efficient and prosperous local economy;

iv. Provide fairness and accessibility for the whole community;

v. Encourage better integration between different modes of travel; and

vi. Maximise the ability of neighbourhoods to support the needs of their residents.

Appendix F

CONSULTATION, REPRESENTATIONS AND RESPONSES

First Consultation Draft, July 2001

1.1 On 20th June 2001 the Council's Environment and Prosperity Policy Advisory Group considered the draft version of these revised guidelines. They were subsequently approved for public consultation and interim use by the Council's Executive Committee on 27th June 2001. The consultation draft was issued on July 16th 2001 and Comments on the Draft were invited during the six week period up to August 27th 2001. The following consultation took place:

- Internal consultation: the Policy Directorate, all Council services, all Members.
- External consultation: 260 letters sent to known interest groups, including Dorset Local Authorities, all know residents' associations in Poole, local developers and agents, housing associations and house builders known to have an interest.
- Publicity: A public notice was placed in the Advertiser. This is a free weekly newspaper that is delivered to every household in Poole.

Second Consultation Draft, October 2003

1.2 On 22nd September 2003 the Council's Local Economy Overview Group considered the second draft version of these guidelines which incorporated changes as a result of the Planning Inspector's Recommendations from the Poole Local Plan First Alteration Public Inquiry. They were subsequently approved for public consultation the Council's and issued for a six week consultation period on 30th October 2004. The following consultation took place:

- Internal consultation: the Policy Directorate, all Council services, all Members.
- External consultation: All objectors with outstanding objections to the Poole Local Plan First Alteration Revised Deposit Plan - 296 members or the public, agents and other interested parties.
- Publicity: A public notice was placed in the Advertiser. This is a free weekly newspaper that is delivered to every household in Poole.

1.3 This Appendix contains copies of the consultation letters and public notices that were issued in connection with both drafts.

Representations

1.4 A comprehensive summary of all representations and proposed changes (resulting from the public consultation) in relation to both drafts are detailed in separate documents:

- 'Parking Guidelines for Poole, March 2002 - Summary of Public Consultation Responses and Changes to Draft Guidance, March 2002'. The first draft of this document was sent to all people / organisations who made a representation on the Draft SPG. This included a letter to explain when the changes and adoption of the Draft was being considered by the Council's Scrutiny and Executive Committees.
- 'Parking Guidelines for Poole, February 2004 - Summary of Public Consultation Responses and Changes to Draft Guidance, Feb 2004'

  Note: These can be obtained from Strategic Planning Services, The Borough of Poole, The Civic Centre, Poole, BH12 2BH (Tel: 01202 633298).

FIRST DRAFT

LETTER SENT WITH COPY OF GUIDANCE TO 260 INTEREST PARTIES:

Direct Dial: (01202) 633298

Please ask for: Bill Richardson

Your Ref:

Our Ref: ParkSPG1/4

Date: 12 July 2001

Dear Sir / Madam,

REVIEW OF SUPPLEMENTARY PLANNING GUIDANCE 'PARKING GUIDELINES'

The Council's Parking Guidelines are currently under review in order to bring them in line with current Government policy.

Planning Policy Guidance note 13 was issued in March 2001 and requires local planning authorities to set maximum car parking standards for new development. The enclosed guidelines are intended to be used by the Council to help decide on appropriate levels of parking provision in new development in line with PPG13.

I am writing to you / your organisation as I would welcome your observations on the first draft of the revised document (enclosed). Included with this is a sheet on which you may note your comments. The closing date for receipt of comments is 27th August 2001.

Comments on the draft document and suggested revisions will be considered by the Council's Environment and Prosperity Policy Advisory Group. The final version will be presented to the Council for adoption as Supplementary Planning Guidance.

If you would like any further advice, please contact either Chris Francombe (01202 262040) or Bill Richardson on the number above.

Yours sincerely,

Bill Richardson - Strategic Planning Officer
For David Ralph
Acting Head of Economic Development and Strategic Planning

Enc. Revised Parking Guidelines

SECOND CONSULTATION DRAFT

LETTER SENT WITH COPY OF GUIDANCE TO 296 INTEREST PARTIES:

Direct Dial: (01202) 633298

Please ask for: Bill Richardson

Your Ref:

Our Ref: I1.6.8

Date: 30 October 2003

Dear Sir / Madam,

POOLE LOCAL PLAN FIRST ALTERATION: NOTICE OF INTENTION TO ADOPT AND PROPOSED MODIFICATIONS

I am writing to you as you have previously made a representation to this plan which has not been fully withdrawn. The purpose of this letter is to inform you that the Public Local Inquiry into outstanding objections to the plan ended in January 2003 and the Inspector's Report was published in April 2003.

In response to the Inspector's recommendations the Council proposes to make further modifications to the Plan. The proposed modifications and objection forms are available at Strategic Planning Services, Civic Centre, Poole BH15 2RU, at boroughofpoole.com and at the Borough's libraries. Objections or other representations in respect of these modifications should be sent in writing on the official form to the address mentioned above by 11 December 2003. I enclose a copy of the formal notice of proposed modifications for your information.

The Council is issuing draft Supplementary Planning Guidance on Affordable Housing and Parking for consultation over the same period. Representations to these must be received at the same address by 11 December 2003. The following documents can be downloaded from the Council's website at boroughofpoole.com:

Document	Location on Web Site
• Statement of Decisions and Modifications to the Revised Deposit Plan (Oct 2003)	'Strategies, Plans and Policies'
• Inspector's Report (March 2003)	'Strategies, Plans and Policies'

- Poole Local Plan First Alteration Revised Deposit Plan (Nov 2001) — 'Strategies, Plans and Policies'
- Draft Supplementary Planning Guidance on Affordable Housing (Oct 2003) — 'Strategies, Plans and Policies'
- Draft Supplementary Planning Guidance 'Parking Guidelines for Poole' (Oct 2003) — 'Strategies, Plans and Policies'
- Objection Form — 'Apply for it'

If you require paper copies of the Supplementary Planning Guidance or any further information please contact Bill Richardson as detailed at the top of this letter.

Yours sincerely

Bill Richardson - Planning Officer
Planning Policy and Implementation

Enc. Notice of intention to adopt and proposed modifications.

FIRST CONSULTATION DRAFT

NOTICE PLACED IN 'THE ADVERTISER' ON 19th JULY 2001:

NOTICE OF PROPOSED REVISIONS TO SUPPLEMENTARY PLANNING GUIDANCE ON PARKING

The Borough of Poole's supplementary planning guidance (SPG) which details with appropriate levels of Parking in new development is currently under review. A draft revised version of the Council's Parking Guidelines which brings this SPG up to date with national Planning Policy Guidance Note 13 (Transportation) is currently available to view. Copies of the consultation draft can be inspected at: Public Libraries or Economic Development and Strategic Planning Services, Civic Centre (2nd Floor), Poole Dorset BH15 2RU (tel. 01202 633360 for a free copy) between the hours of 8.30am-5.15pm, Mondays to Thursdays, and between 8.30am and 4.45pm on Fridays. Any comments on the SPG should be made in writing and need to be received at the address referred to in this notice by 27th August 2001 at the latest.

SECOND CONSULTATION DRAFT

NOTICE PLACE IN 'THE ADVERTISER' AND 'THE ECHO' ON 30h OCTOBER 2003:

POOLE LOCAL PLAN FIRST ALTERATION

NOTICE OF REVISED DRAFT SUPPLEMENTARY PLANNING GUIDANCE

AFFORDABLE HOUSING
PARKING GUIDELINES

The Borough of Poole has agreed for consultation revised draft Supplementary Planning Guidance on the delivery of affordable housing through the planning system and on parking guidelines. The Supplementary Planning Guidance supplement policies and proposals in Poole Local Plan First Alteration Revised Deposit Plan but they are not part of the development plan. Previous guidance on affordable housing provision was issued October 2001 and on parking guidelines March 2002 and this is now being revised.

Copies of the Revised Draft Supplementary Planning Guidance are available free of charge at Strategic Planning Services, Borough of Poole, Civic Centre, Poole, Dorset BH15 2RU, telephone 01202 633360 between 8.30am and 5.15pm Mondays to Thursdays and 8.30am and 4.45pm on Fridays and on the website boroughofpoole.com.

Any comments on the Supplementary Planning Guidance should be made in writing and sent to the above address before 11 December 2003.

David Ralph BA MSc DipTP MRTPI
Head of Strategic Planning Services
Borough of Poole Civic Centre POOLE Dorset BH15 2RU

Operator: Poole (01202) 633633
Fax: Poole (01202) 633077
Minicom Tel: Poole (01202) 743636
DX Number: DX123820 POOLE
Internet: www.boroughofpoole.com